REV.	CHANGE CONTENT	BY	DATE

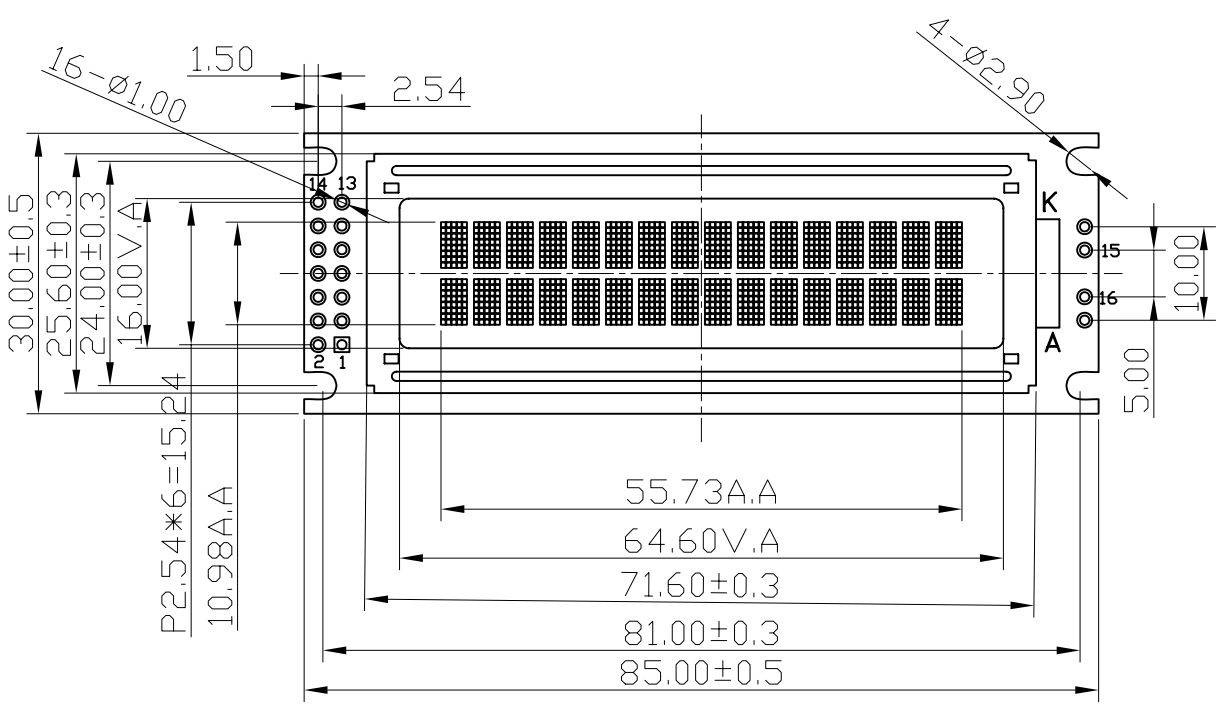

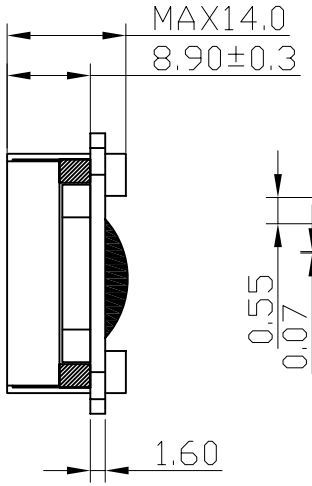

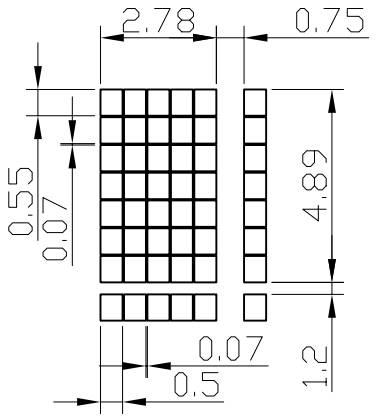

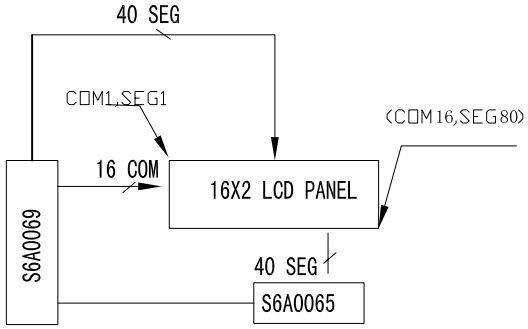

NOTE:
1. DISPLAY TYPE: STN-BLUE-NEGATIVE
2. DISPLAY MODE: TRANSMISSIVE
3. DRIVE METHOD: 1/16 DUTY, 1/5 BIAS, 4.6V Vop, 5V VDD
4. VIEWING DIR.: 6:00
5. OP. TEMP.: -20°C~70°C
6. ST. TEMP.: -30°C~80°C
7. BACKLIGHT: COLOR-WHITE, VLED=4.2±0.2V, IF=30mA
8. LCD CONTROLLER :AIP31066/AIP31065

PIN	1	2	3	4	5	6	7	8	9	10	11	12	13	14	15	16
SYMBOL	VDD	GND	V0	RS	R/W	E	D0	D1	D2	D3	D4	D5	D6	D7	LED+	LED-

Kingtech Group., Ltd

DESIGN	JHG	20080331	STANDARD			DRAWING PV160210C	
CHECKED			TECHNOLOGY			DRAWING TITLE : LCM DRAWING	
APPROVED			Q.A			FILE NO. : 8	
						REV. : A	SCALE : -
						PROJECTION:	UNIT : mm
							SHEET : 1/1